TOWMASTER®

Deck-Over
T-50 / T-50LP

"LP" (Low-Profile) models feature a 10-inch beam, steel over the wheels and a 12-degree beavertail.

Wood protectors are standard on Towmaster T-series trailers. They protect the end of the deck boards when loading equipment.

Two-way spring assist ramps allow you to easily lift ramps off deck and also off the ground. Grommet mounted LED lights are standard.

Description:

These premium Towmaster® deck-over trailers are built more durable and more stylish to provide a great looking trailer that will last a long time. They are great for hauling heavy equipment of all types. If you need a lower profile trailer, the T-50LP gives you a 2-in lower deck and lower loading angle. Two-way spring-assist ramps and wood protectors are standard.

Quick Specs:

- 36"/ 34" deck height (empty)
- 8'-6"deck width
- 24'-0" deck length
- Air brakes with ABS
- Hutchens® suspension
- Adjustable hitch
- Two-way spring-assist ramps
- LED lights and sealed wiring

towmaster.com

800-462-4517

U.S.A. BUILT
EMPLOYEE OWNED

Photos may show optional equipment.

LIMITED LIFETIME FRAME WARRANTY

DEXTER AXLE

NATIONAL ASSOCIATION OF TRAILER MANUFACTURERS NATM APPROVED

GALVANIZING AVAILABLE

GREEN MANUFACTURING EFFICIENCIES

T-50 / T-50LP

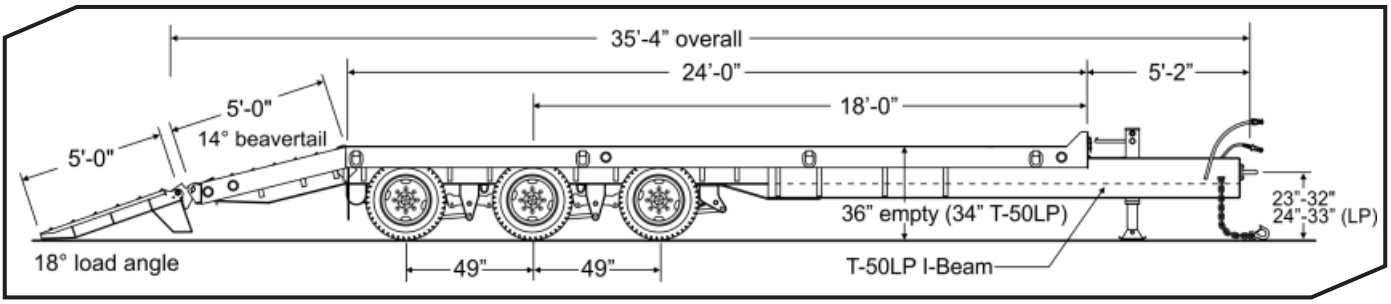

SPECIFICATIONS

S=Standard O=Optional

CAPACITY / DIMENSIONS	T-50	T-50LP		
Capacity Rating (lbs/kg)	50,000 / 22,680	50,000 / 22,680		
GVWR (lbs/kg)	60,700 / 27,533	60,600 / 27,488		
GAWR (lbs/kg)	54,480 / 24,712	54,480 / 24,712		
Approx. Weight (lbs/kg)	10,700 / 4853	10,600 / 4808		
Overall Length (ft-in/mm)	35-4 / 10,770	35-4 / 10,770		
Deck Height (empty)(in/mm)	36 / 914	34 / 864		
Deck Length (ft-in/mm)	24-0 / 7315	24-0 / 7315		
Overall Width (ft-in/mm)	8-6 / 2591	8-6 / 2591		
TONGUE				
Tongue Length (ft-in/mm)	5-2 / 1575	5-2 / 1575		
Storage Tray with Lid	S	S		
Pintle Ring (in)	S	S		
High-Tensile Safety Chain (size – in)	5/8 Grade 80	5/8 Grade 80		
Bolt-on Two-Speed Parking Jack	25K	25K		
FRAME / RAMPS				
Main Beam	W16 x 26, Gr. 50	W10, x 26 Gr. 50		
One-Piece Cold-Formed Frame Rails	S	S		
Crossmembers	3" Jr I-beam	3" Jr I-beam		
Headboard (in/mm)	5.5 / 140	5.5 / 140		
Channel Side Rails (in/mm)	8 / 203	8 / 203		
Deck Material	2" nom. White Oak	2" nom. White Oak		
Wood Protectors	S	S		
Forged D-Ring Tie Downs (total/Side)	8 / 4	8 / 4		
Beavertail (ft-in / mm) (angle-degrees)	5-0 / 1524 (14)	5-0 / 1524 (12)		
Ramps (ft-in x in/mm)	5-0 x 21 / 1524 x 533	5-0 x 21 / 1524 x 533		
Two-Way Spring Assist	S	S		
SUSPENSION / TIRES				
Hutchens Spring Suspension	S	S		
No. of Axles	3	3		
Axle Capacity (each) (lbs/kg)	22,500 / 10,206	22,500 / 10,206		
Axle Spread (in/mm)	49 / 1245	49 / 1245		
Hubs	Oil Bath	Oil Bath		
Brake Size (in/mm)	12.25x7.5 / 311x191	12.25x7.5 / 311x191		
Air Brakes (Full ABS Modulated, Park Brake All Axles)	S	S		
Hub Piloted Budd-type Wheels (in/mm)	17.5x6.75 / 445x171	17.5x6.75 / 445x171		
Wheel Bolt Pattern	8-bolt	8-bolt		
Tires / Load Range Rating	215/75R17.5 / H	215/75R17.5 / H		

STANDARD EQUIPMENT

- Adjustable hitch height
- 7-pole round electrical plug
- Weather resistant sealed modular wiring
- Grommet mounted LED lights
- Registration holder
- Rust inhibiting primer
- Durable, rust inhibiting top coat
- Die-cut UV resistant vinyl decals
- D.O.T. approved conspicuity tape
- Mud flaps
- Trailer color: Equipment black
- Ramp color: Equipment Red

OPTIONAL EQUIPMENT

Other options may be available. Ask your dealer or visit our web site.

- Dual parking jacks
- Additional deck length
- Additional tie-downs
- Rub rail with stake pockets
- 12K electric winch
- Spare tire and wheel mount
- Spare tire and wheel
- Tire upgrade (load range G)
- Air-Lift front axle
- Double-break beavertail (T-50 only)
- Several beavertail options
- Color options: Construction Yellow, Equipment Red, Blue, Charcoal
- Galvanizing

U.S.A. DESIGNED AND BUILT IN LITCHFIELD, MN

*Payload capacity is calculated by taking the GVWR and subtracting the trailer weight.

Listed GVWR, weights, and dimensions are for reference only. Manufacturer reserves the right to change models and specifications as they see fit. See our web site or your local authorized dealer for more information.

www.towmaster.com
800-462-4517

©Towmaster, Inc. 06/2015